Master® PALM
www.masterairtool.com

MPT-51500 3" Mini Polisher

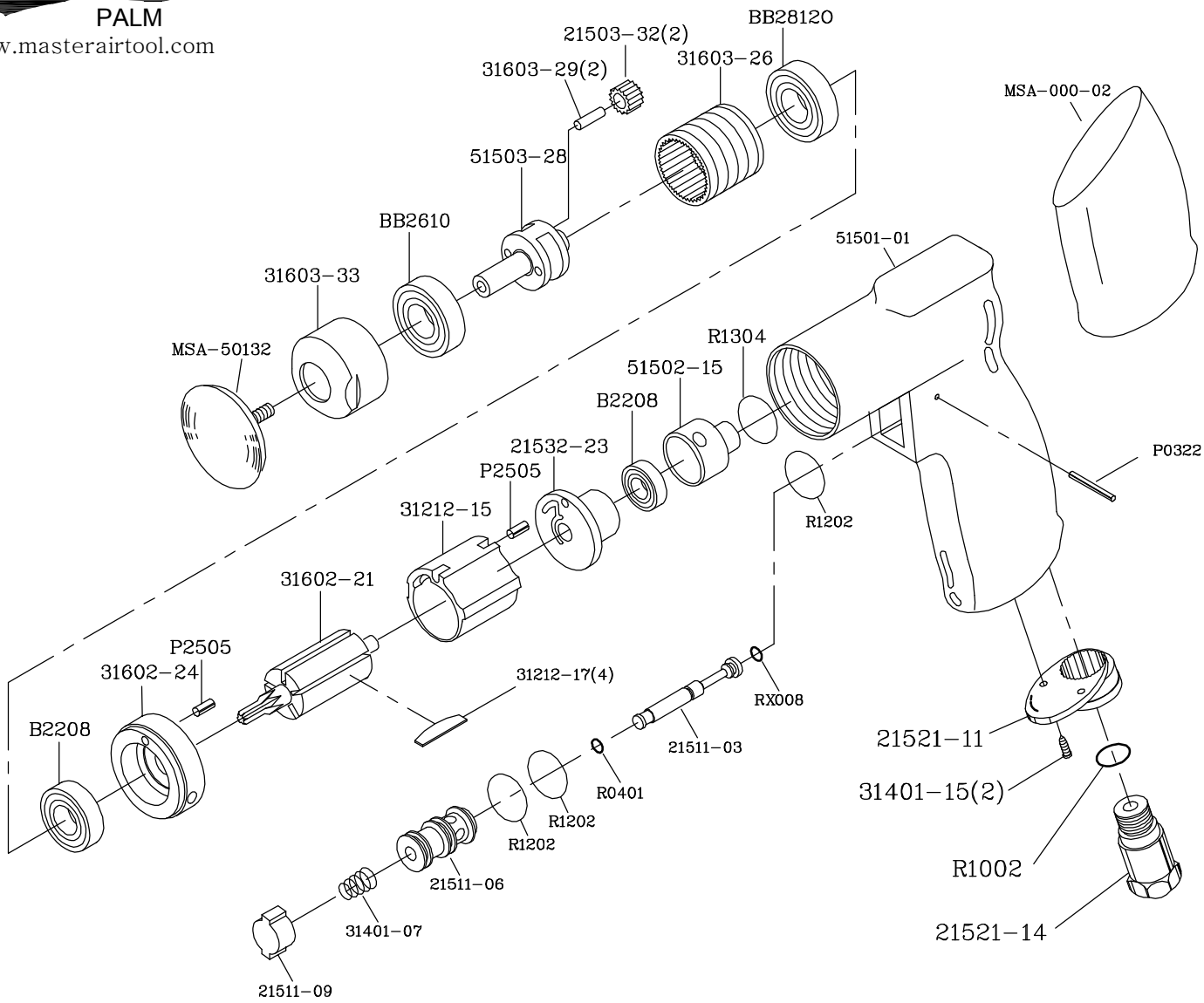

DESCRIPTION	PARTS NO.	DESCRIPTION	PARTS NO.
MOTOR HOUSING	51501-01	REAR END PLATE	21532-23
THROTTLE VALVE	21511-03	SPRING PIN (2)	P2505
O RING	R0401	CYLINDER	31212-15
O RING (3)	R1202	ROTOR	31602-21
REVERSE BUSHING	21511-06	ROTOR BLADE (4)	31212-17
VALVE SPRING	31401-07	FRONT END PLATE	31602-24
TRIGGER	21511-09	BEARING	BB2812O
SPRING PIN	P0322	PLANET GEAR SEAT	51503-28
EXHAUST SLEEVE	21521-11	PLANET SPINDLE (2)	31603-29
CIRCLE OF SCREW(2)	31401-15	PLANET GEAR (2)	21503-32
O RING	R1002	INTERNAL GEAR	31603-26
INLET BUSHING	21521-14	BEARING	BB2610
O RING	R1304	CLAMP NUT	31603-33
O RING	RX008	3" PAD	MSA-50132
REQULATER	51502-15	SPANNER WRENCH	WO009
BEARING (2)	B2208	HOUSING GRIP	MSA-000-02

2012.12.26

ⓒ 1989-2012 Master Air Tool CO.,LTD. All rights reserved.